RECEIVED NOV 19 1962

3e
Ka

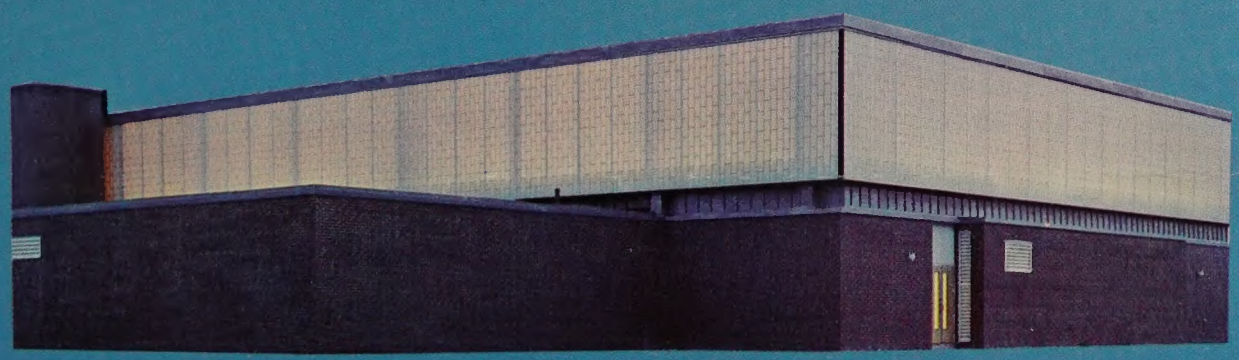

translucent

KALWALL®

"walls of light"

a.i.a. file no. 17-A

First Missionary Church, Berne, Indiana. Architect: Orus O. Eash, AIA

for soft, subtle, shadowless daylighting.....

KALWALL® TRANSLUCENT WALLS

Glarefree light through translucent Kalwall adds a new dimension to interiors that only diffused *natural* daylight can give. Kalwall captures sunlight — spreads it throughout the room, even on the cloudiest days.

Today's Kalwall is a result of years of intensive testing and development to bring you the finest in light-transmitting building products. Highest quality fiberglass reinforced polyester faces, manufactured to an *exclusive* Kalwall formulation, are permanently bonded to a precision aluminum grid core to form a wall unit with a combination of features unduplicated by any building product:

- STRUCTURAL: Kalwall's high-tensile-strength fiberglass faces and strong aluminum grid core form a sandwich structure capable of spanning long distances without the need for intermediate support.
- INSULATING: Kalwall has the low U-factor of 0.40 BTU/hr-ft^2-°F, reducing heating and cooling requirements.
- SHATTERPROOF: Kalwall's fiberglas faces are strong, shatterproof and highly resistant to damage from basketballs, volleyballs, and other impacts.
- LOW COST: Large, economical Kalwall units go up fast, at lowest cost.
- LIGHTWEIGHT: Kalwall weighs only 1.5 lbs/sq ft. A 4′ x 8′ Kalwall unit weighs only 48 pounds.
- LARGE SIZE: Kalwall is made in sizes up to 4′ wide by 20′ high.
- EASILY INSTALLED: Kalwall requires only perimeter sealing at the job site — usually with complete Kalwall installation systems designed specifically for this product.

Kalwall is manufactured under the direction of personnel with over 25 years of research in the field of laminated sandwich products. Kalwall quality has been demonstrated in over 4,000 installations throughout the world — a record of experience and performance unmatched in this industry.

cover photos: Newark (N.J.) Airport Control Tower, Arch.: A. Gordon Lorimer, FAIA. Dillard High School, Ft. Lauderdale, Florida, Arch.: Gamble, Pownall & Gilroy, AIA. Bourne (Mass.) High School, Arch.: Drummey, Rosane, Anderson, AIA.

QUICK, LOW-COST INSTALLATION

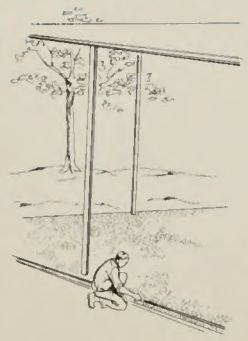

Interior sections of head and sill installed to receive Kalwall.

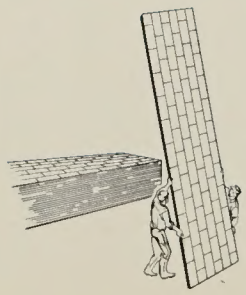

Two men easily handle the largest Kalwall unit.

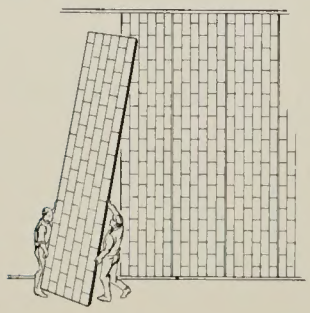

Kalwall unit positioned in opening.

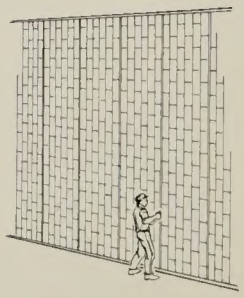

Kalwall units sealed at perimeter with Kalwall closures and elastic sealing tape.

installation systems

• STANDARD SERIES
half-size sections

for 2-3/4″ KALWALL

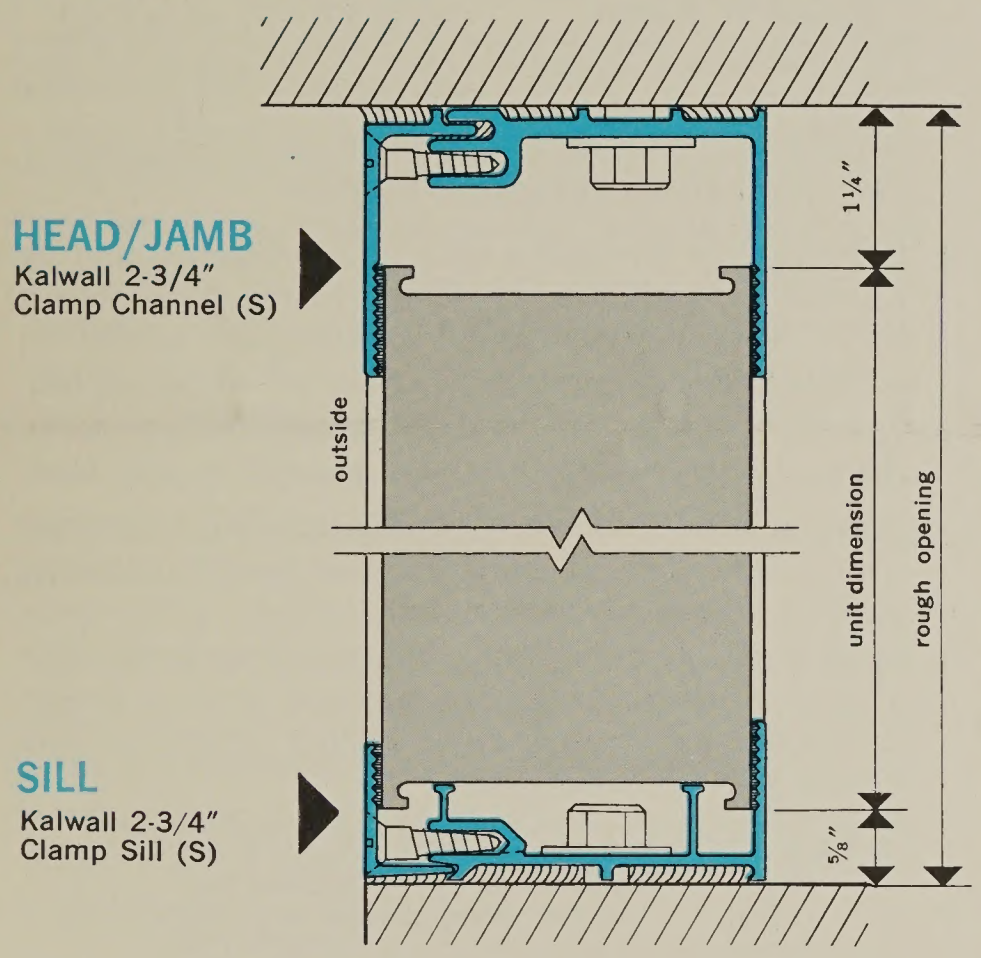

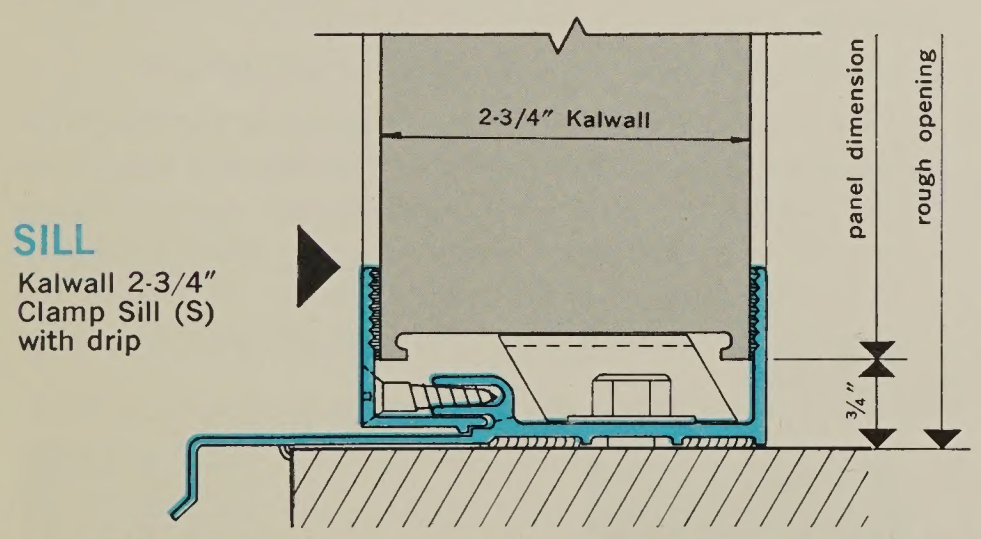

for 1-9/16″ KALWALL

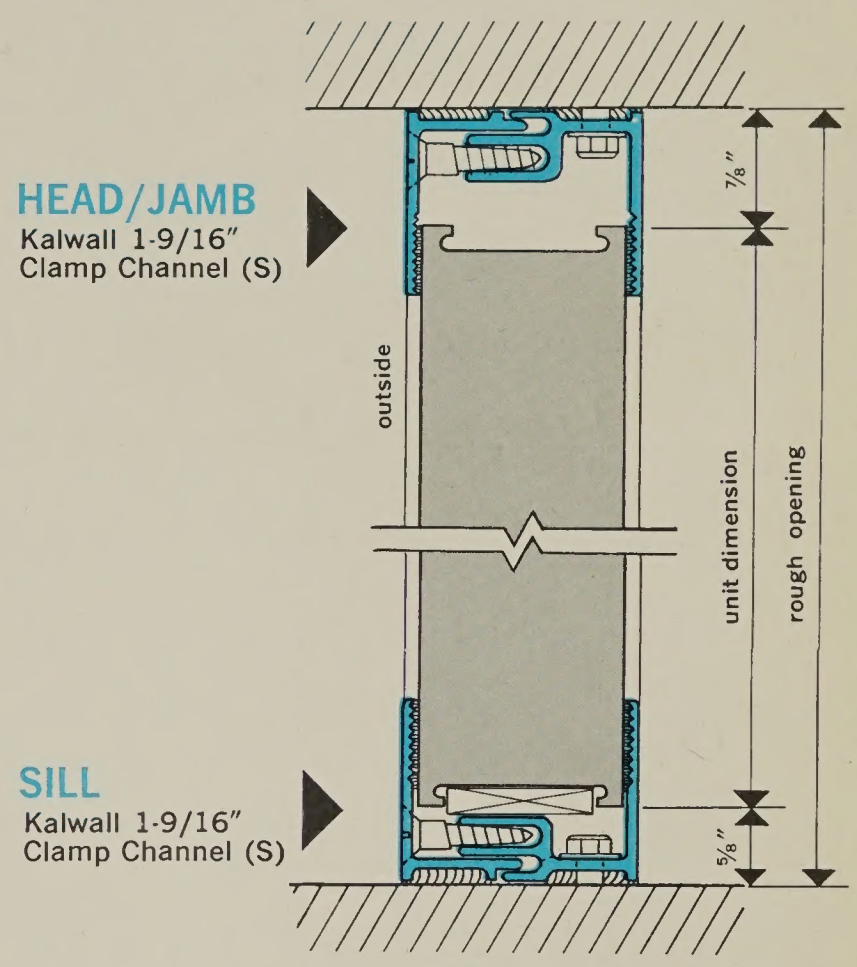

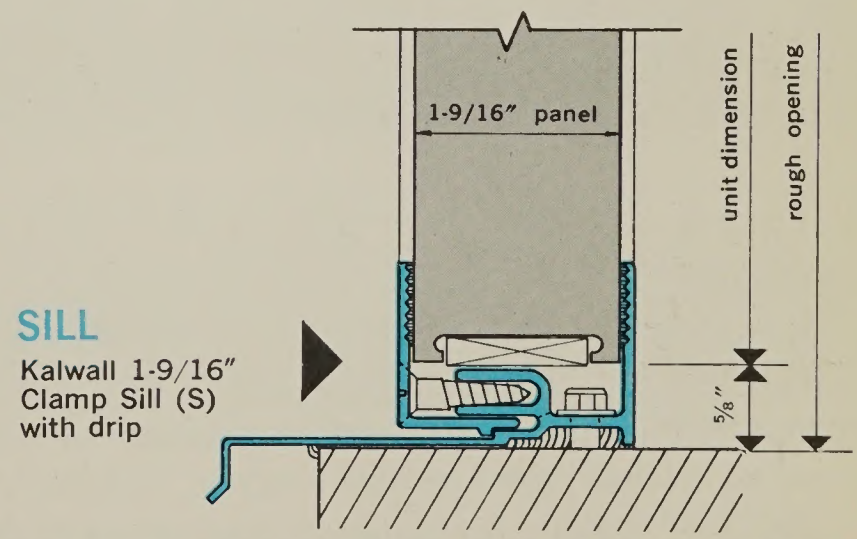

for 2-3/4″ or 1-9/16″ KALWALL
UNIT/UNIT

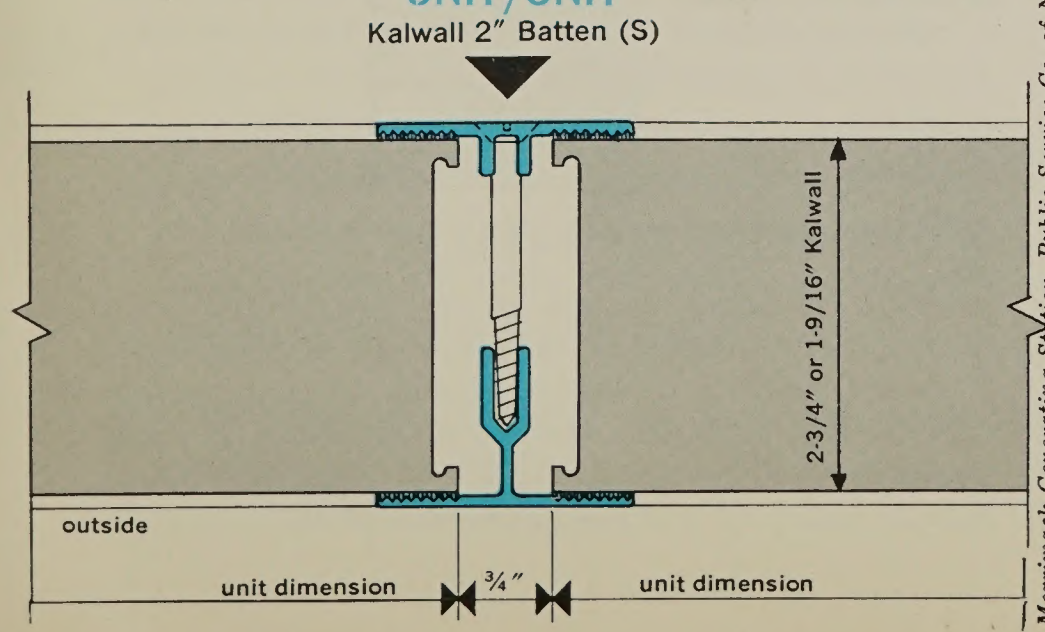

Merrimack Generating Station, Public Service Co. of N. H., Arch. & Eng.: Jackson & Moreland.

Newark (N.J.) Airport Control Tower, Arch.: A. Gordon Lorimer, FAIA.

KALWALL TEST DATA

These tests were conducted by an independent testing laboratory and by Kalwall Corporation. All tests are available on request.

SOUND TRANSMISSION: An average loss of 29 to 32 decibels in the normal range of frequencies.

IMPACT TEST: No break in face material at 90 ft-lbs impact.

COEFFICIENT OF EXPANSION: Approximately 1.24×10^{-5} in/in—°F, or approximately 1/8″ in 10′ for a temperature change of 100°F.

LIGHT TRANSMISSION: Varies from 5% to 65%, according to design requirements.

FIRE TEST: Samples of window glass and standard Kalwall were individually mounted in the front opening of a chamber enclosing an oil burner. A fire was maintained within at a temperature of approximately 1,200°F. While the glass samples cracked and fell out of the frame in less than five minutes, the fire had not burned through the outside of Kalwall after a period exceeding four hours.

HEAT TRANSMISSION FACTOR: The overall coefficient of heat transmission (U) averages 0.40 BTU/hr-ft^2—°F (calculated).

SUGGESTED MAXIMUM CLEAR SPANS

joint system	2-3/4″ Kalwall	1-9/16″ Kalwall
Kalwall 2″ Batten	up to 12′-0″	up to 8′-5″
Special Kalwall Stiffeners	up to 20′-0″	up to 13′-0″

SHORT SPECIFICATIONS

(long specifications available on request)

Kalwall Grid Structures shall be as manufactured by Kalwall Corporation, 43 Union Street, Manchester, N. H. Kalwall shall consist of fiberglass reinforced polyester faces permanently bonded under a controlled eight hour heat and pressure process to a mechanically-interlocked extruded aluminum grid core.

Color of bond to be black; bond line shall be straight with a neat edge. At intersection of grid muntins and mullions, bond to be complete, without white spots. Bond shall be waterproof. Exterior translucent face of grid structure shall have a special erosion protective surfacing applied under factory controlled conditions during manufacture.

TRANSLUCENT COLORS

White	Northern Yellow	Southern Red
Crystal	Northern Blue	Southern Yellow
Green		Southern Blue

Southern (or dark) colors contain more sunlight filtering pigments than the Northern (or light) colors.

3 KALWALL DESIGNS

Kalwall brings you three space patterns for complete freedom in translucent design. Translucent faces and the aluminum grid core produce an ever-changing texture and depth not found in any other material. And added is Kalwall's wide choice of colors for exciting effects with insert patterns or colored translucent faces.

Kalwall "Shoji"

Kalwall "Random Grid"

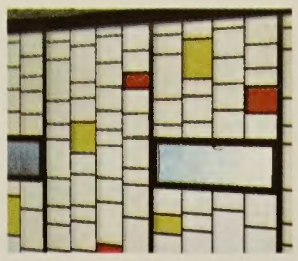

Kalwall "Standard"

OPAQUE PANELS

Kalwall insulated opaque panels are available in many different materials to suit design requirements. Opaque fiberglass, porcelain enamel, ceramic, cement asbestos and plywood are a few of the many face materials bonded to the Kalwall grid core to produce opaque panels of many textures and colors.

KALWALL® PANEL-UNIT WALL

The Kalwall Panel-Unit Wall system combines translucent Kalwall with opaque panels, fixed and operating sash, and louvers into lightweight, structural units up to 4′ wide by 20′ high. Completely preassembled at the factory, these units arrive at the job site in ready-to-install condition — requiring only perimeter fastening and sealing to the building.

Kalwall's Panel-Unit Wall employs a system of interconnected *structural* components, forming rigid, modular units which replace the heavy mullions and floating panels used in conventional curtain wall design. Normal loads are dispersed throughout the entire panel-unit, rather than converging on the mullions alone. Closures at head, sill, jamb and unit-to-unit serve only a sealing function — need not have additional structural characteristics.

Unlimited flexibility of design is achieved through the many types of components available. Choosing from a wide variety of colors and textures, you may arrange them in any design within the modular units. And added is this exclusive combination of Kalwall features for your building:

- CONTROLLED LIGHTING: Diffused interior lighting may be varied to a great degree with combinations of translucent faces (from 5% to 65% light transmission). When used in combination with opaque panels and windows, light transmission may be varied from 0-87%.

- UNIT DESIGN: Factory preassembled units, up to 4′ x 20′, allow up to 80 sq ft of wall to be erected at one time. Eliminates slow and costly hand assembly of wall components under difficult job site conditions.

- CLAMP-TITE INSTALLATION: Kalwall's complete clamp-tite installation system provides a positive, weathertight seal to building. Unlike conventional floating panel systems, these closures have a continuous screw-clamp action along perimeter of Panel-Units. Kalwall Elastic Sealing Tape eliminates the need for multi-part caulking compounds applied under varying field conditions.

- LOW COST: Factory preassembly of components, low shipping charges and simple installation effect large savings in building costs.

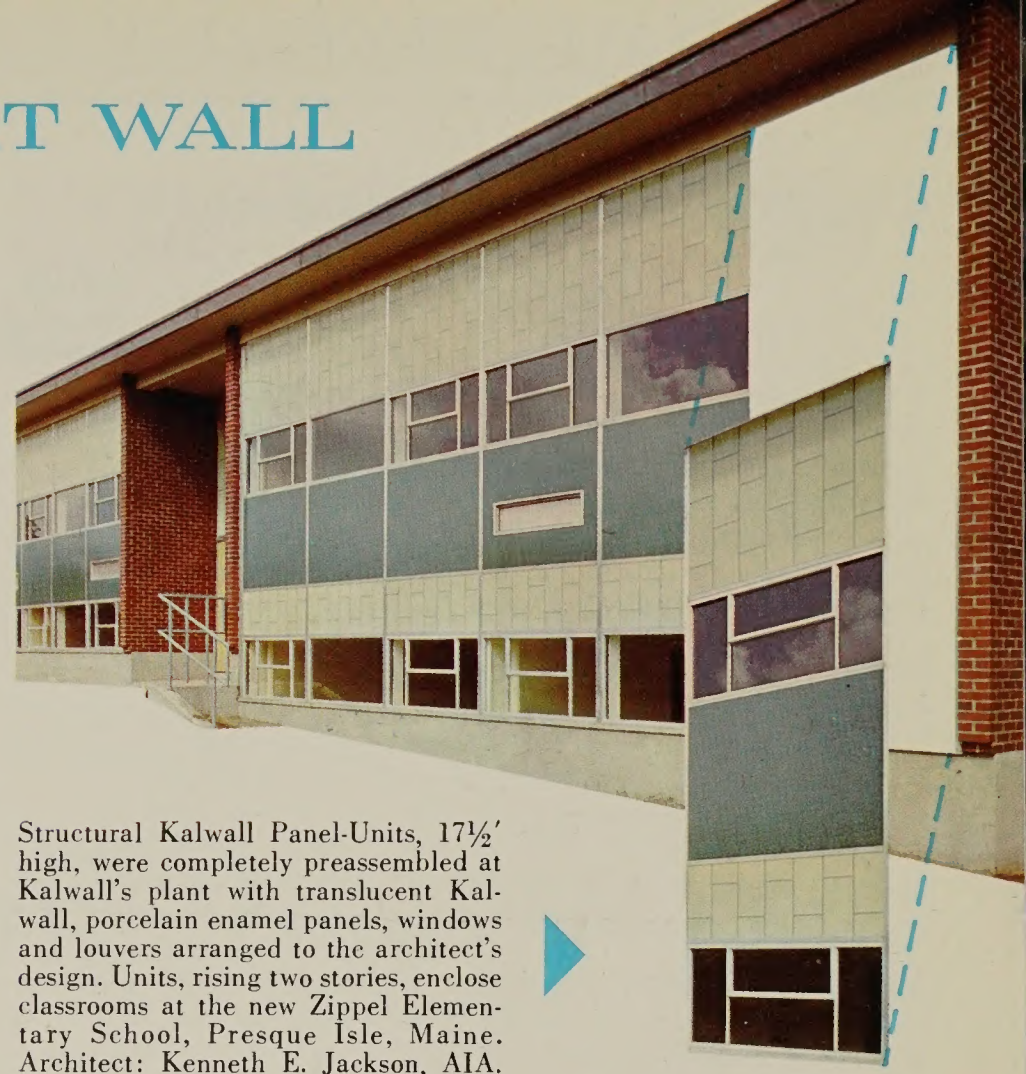

Structural Kalwall Panel-Units, 17½′ high, were completely preassembled at Kalwall's plant with translucent Kalwall, porcelain enamel panels, windows and louvers arranged to the architect's design. Units, rising two stories, enclose classrooms at the new Zippel Elementary School, Presque Isle, Maine. Architect: Kenneth E. Jackson, AIA.

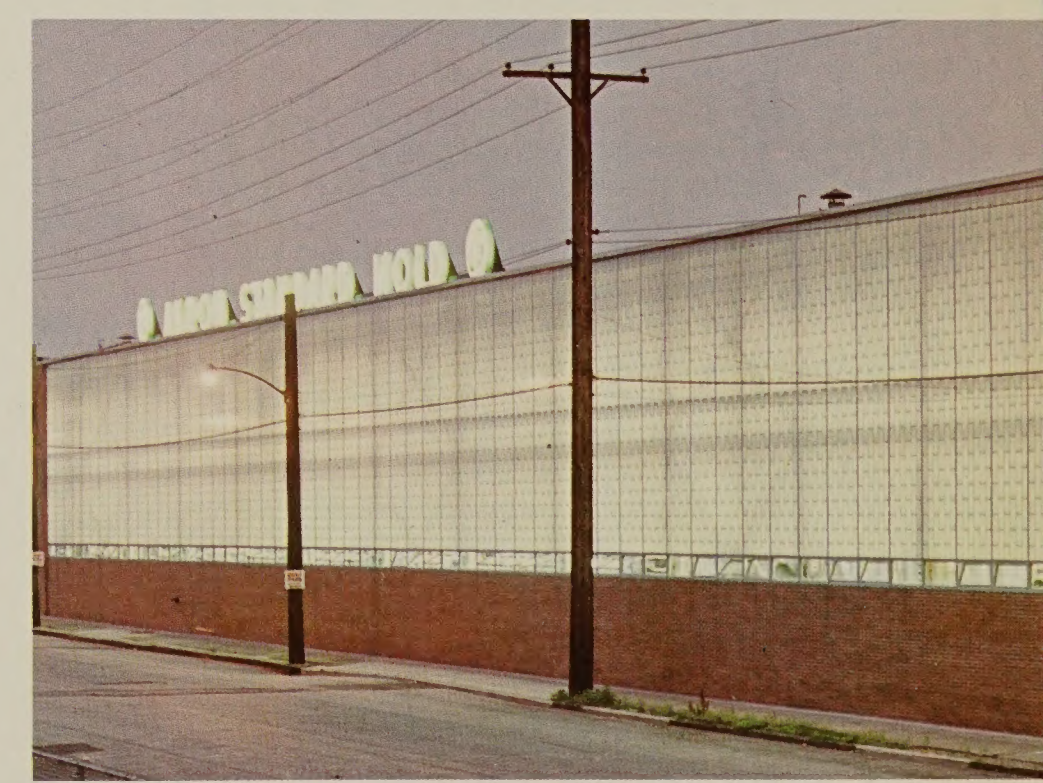

Akron Standard Mold, Inc., Akron, Ohio.
Architect: Trajen Cracium

U. S. Post Office, Homestead, Florida.
Architect: E. Jay Wells, Jr.

• LONG SPAN SYSTEM

for clear spans up to 18′-9″

Kalwall's *Long Span* Panel-Unit Wall system combines translucent Kalwall, opaque panels, fixed or operating sash, and louvers interconnected with the Kalwall Long Span Splice Edge continuous along either side of the Panel-Unit. Unsupported clear spans of up to 18′-9″ are possible with this construction, depending upon wind load requirements.

Sections shown indicate Kalwall *Standard Series* Installation System and Kalwall Clamp-Tite Sash. However, sash and louvers of most leading manufacturers may be incorporated into the Kalwall Panel-Unit Wall System.

SHORT SPECIFICATIONS

(long specifications available on request)

GENERAL: Long Span Panel-Unit Wall system shall be as manufactured by Kalwall Corporation, 43 Union Street, Manchester, N. H.

COMPONENTS: A. Translucent Kalwall: (see page 4). B. Opaque Panels: (see page 4). C. Sash: Sash shall be as specified by the architect and compatible with the Long Span Panel-Unit Wall system. D. Louvers: Louvers shall be as specified by the architect and compatible with the Long Span Panel-Unit system.

PANEL-UNIT CONSTRUCTION: All required components shall be preassembled and sealed into Panel-Units by Kalwall Corporation. Panel-Units shall be shipped to the job site in rigid structural units (except for removable components) and shall be ready for erection, as units, by the contractor.

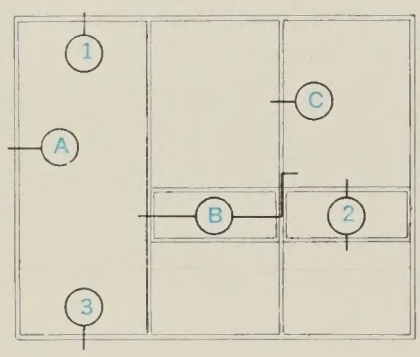

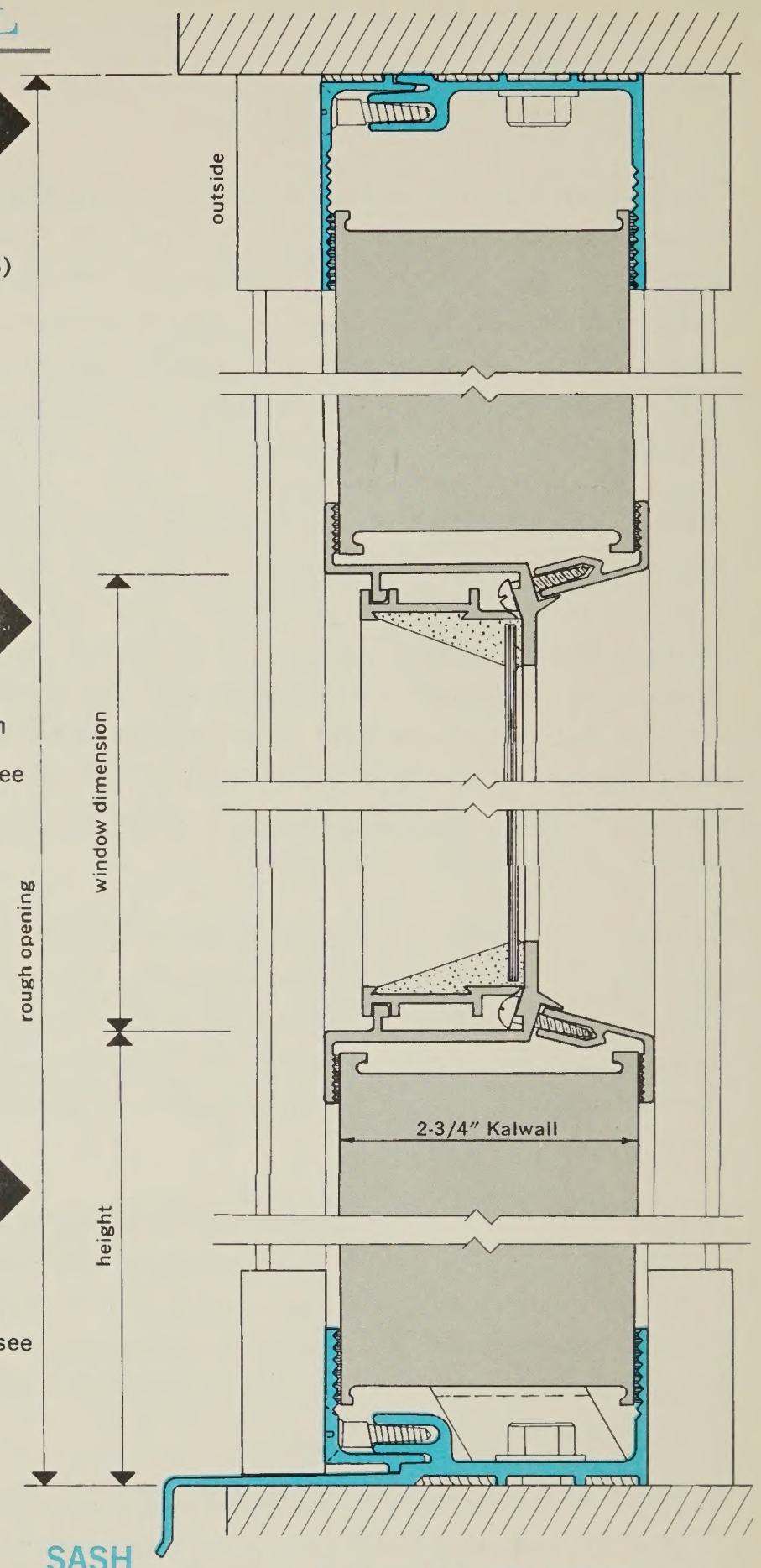

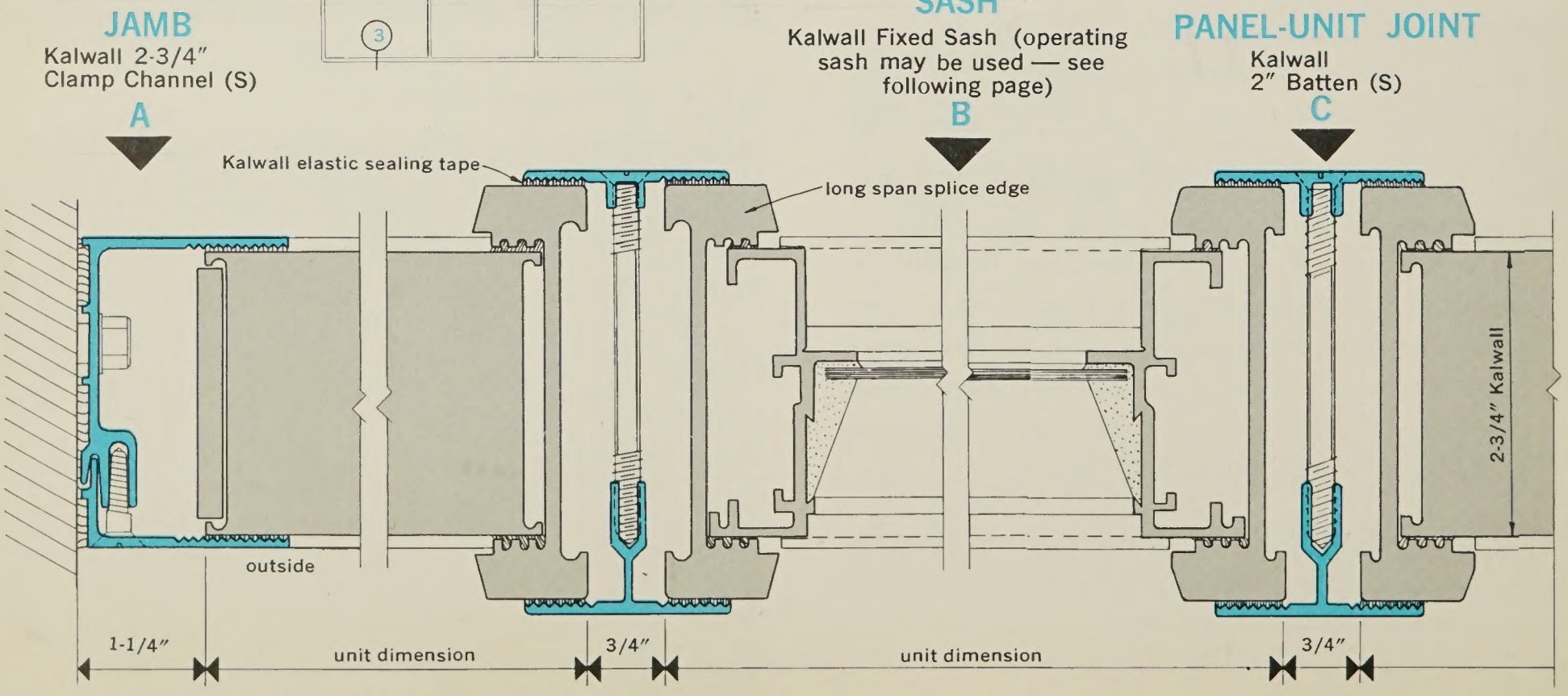

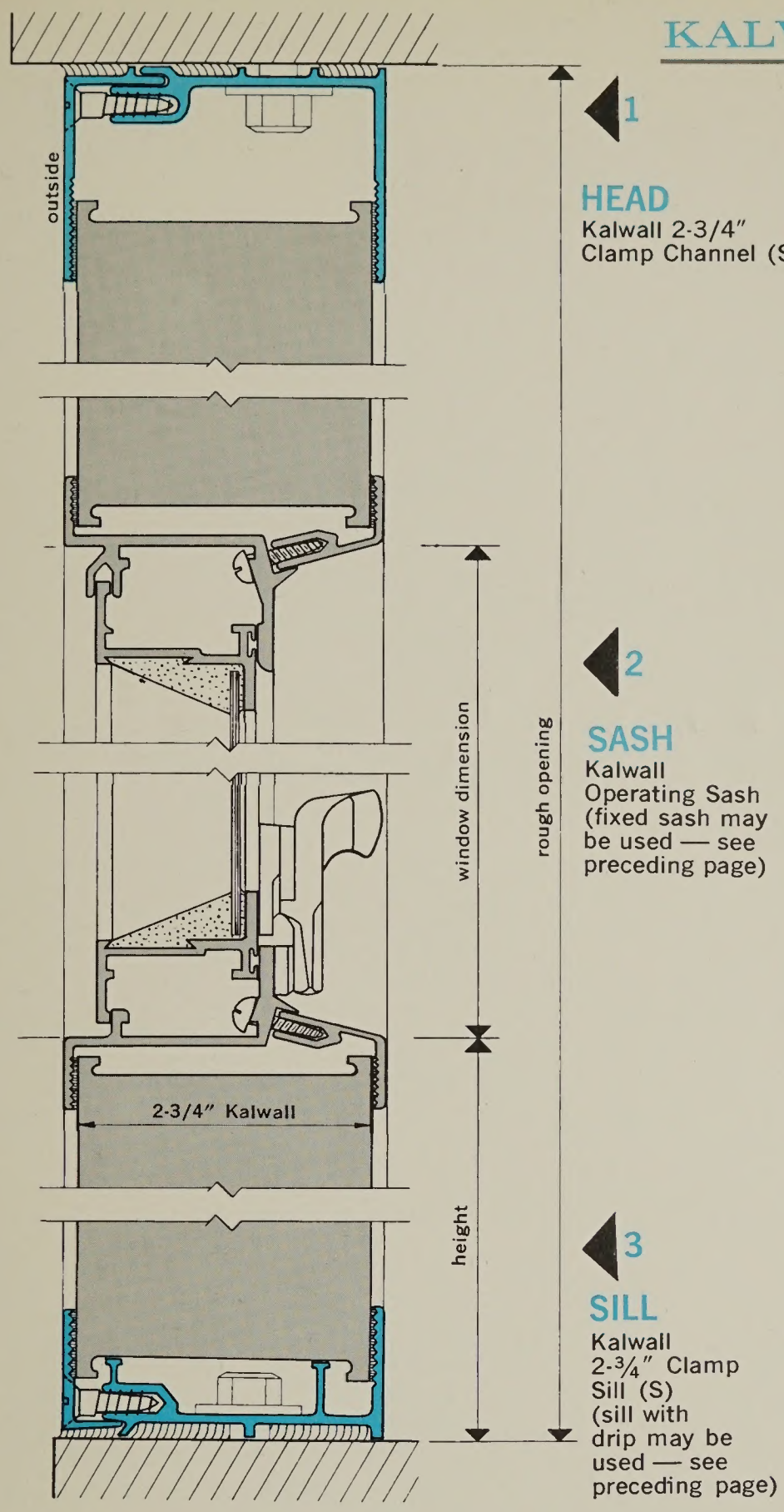

• SHORT SPAN SYSTEM

for clear spans up to 12′-0″

Similar in construction to the long span system, Kalwall's *Short Span* Panel-Unit Wall system combines translucent Kalwall, opaque panels, fixed or operating sash, and louvers interconnected with the Kalwall Short Span Splice Edge along either side of the Panel-Unit. Unsupported clear spans of up to 12′-0″ are possible with this construction, depending upon wind load requirements. In combination with Kalwall Fin Battens (see back cover), spans up to 15′-10″ are permitted, again depending upon design requirements.

Sections shown indicate Kalwall *Standard Series* Installation System and Kalwall Clamp-tite Sash. However, sash and louvers of most leading manufacturers may be incorporated into the Kalwall Panel-Unit Wall system.

SHORT SPECIFICATIONS

(long specifications available on request)

GENERAL: Short Span Panel-Unit Wall system shall be as manufactured by Kalwall Corporation, 43 Union Street, Manchester, N. H.

COMPONENTS: A. Translucent Kalwall: (see page 4). B. Opaque Panels: (see page 4). C. Sash: Sash shall be as specified by the architect and compatible with the Short Span Panel-Unit Wall system. D. Louvers: Louvers shall be as specified by the architect and compatible with the Short Span Panel-Unit system.

PANEL-UNIT CONSTRUCTION: All required components shall be preassembled and sealed into Panel-Units by Kalwall Corporation. Panel-Units shall be shipped to the job site in rigid structural units (except for removable components) and shall be ready for erection, as units, by the contractor.

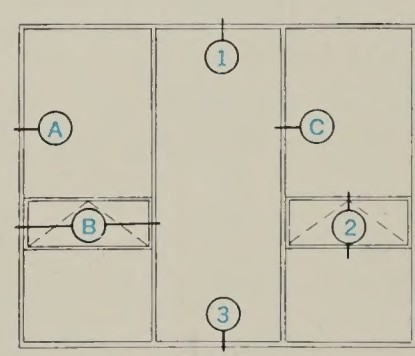

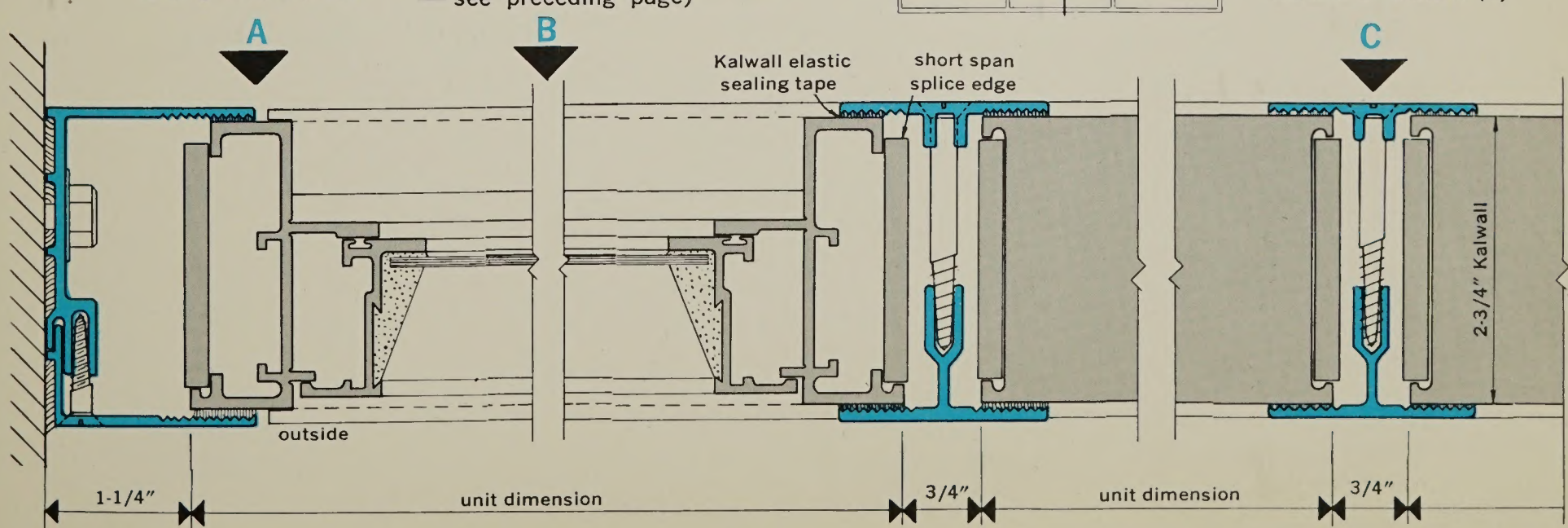

Clarkston Community Senior High School, Clarkston, Mich.
Architects: Louis C. Kingscott & Associates, AIA.

• FIN BATTENS

¼ size sections

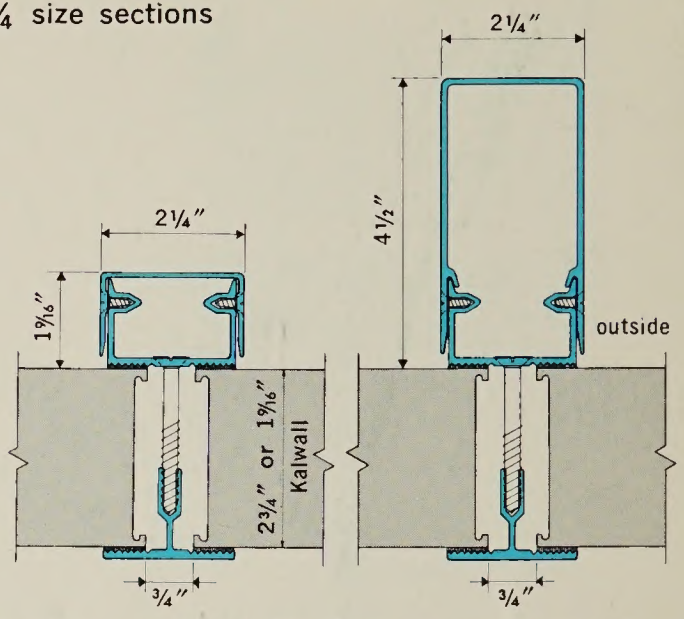

Kalwall 1⁹⁄₁₆″ and 4½″ Fin Battens may be used with Kalwall Translucent Walls and both Kalwall Panel-Unit Wall systems to provide vertical design emphasis at joints, and to increase span capabilities.

• SILHOUETTE STIFFENER

¼ size sections

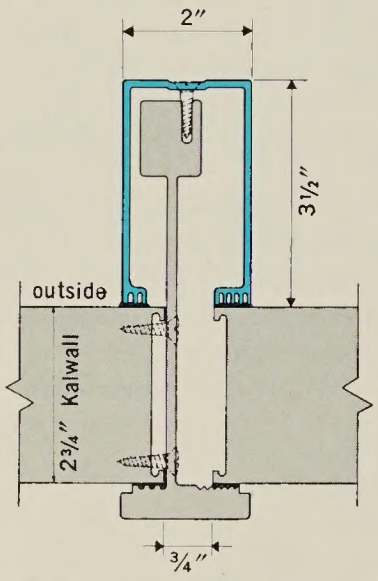

The Kalwall Silhouette Stiffener may be used with either translucent Kalwall or with the Kalwall Panel-Unit Wall system to allow clear spans up to 24′-4″. (Note: The Silhouette Stiffener is factory-applied to the Kalwall unit.)

Bathroom designed for HOUSE BEAUTIFUL magazine

KALWALL® ARCHITECTURAL SERVICES

Kalwall Corporation's Architectural Service Department is fully staffed with engineers, estimators and draftsmen ready to aid you through all stages of your design — from preliminary installation suggestions and estimates through the final completion of your specifications. This department is qualified to work with installations ranging in size from single units up to entire buildings constructed with translucent Kalwall.

Kalwall Corporation has a leading group of authorized distributors in all architectural centers. Contact your local distributor for complete information.

Kalwall is also available in translucent Skylights and Skyroofs. Please turn to $\frac{20b}{Ka}$ or write to:

KALWALL® CORPORATION

43 Union Street Manchester, New Hampshire telephone: NAtional 7-7887

Kalwall Corporation is engaged in continued research to improve its products. Therefore, the right is reserved to modify or change material in this brochure without notice. All data in this brochure is correct to the best of our knowledge. However, no warranty is expressed or implied.

Printed in USA
Form 9-611
U.S. Pat. Nos. 2,931,468 & 2,981,382 and Pats. Pend.